LM74 SPI/Microwire12-Bit Plus Sign Temperature Sensor

Check for Samples: LM74

FEATURES

- **0.0625°C Temperature Resolution**
- **Shutdown Mode Conserves Power Between Temperature Reading**
- **SPI and MICROWIRE Bus Interface**
- **5-Bump DSBGA Package Saves Space**

APPLICATIONS

- **System Thermal Management**
- **Personal Computers**
- **Disk Drives**
- **Office Electronics**
- **Electronic Test Equipment**

KEY SPECIFICATIONS

- **Supply Voltage 3.0V or 2.65V to 5.5V**
- **Supply Current**
  - **Operating**
    - **265µA (typ)**
    - **520µA (max)**
  - **Shutdown**
    - **3µA (typ)**
- **Temperature Accuracy**
  - **−10°C to 65°C, ±1.25°C(max)**
  - **−25°C to 110°C, ±2.1°C(max)**
  - **−55°C to 125°C, ±3°C(max)**

DESCRIPTION

The LM74 is a temperature sensor, Delta-Sigma analog-to-digital converter with an SPI and MICROWIRE compatible interface. The host can query the LM74 at any time to read temperature. A shutdown mode decreases power consumption to less than 10 µA. This mode is useful in systems where low average power consumption is critical.

The LM74 has 12-bit plus sign temperature resolution (0.0625°C per LSB) while operating over a temperature range of −55°C to +150°C.

The LM74's 3.0V to 5.5V supply voltage range, low supply current and simple SPI interface make it ideal for a wide range of applications. These include thermal management and protection applications in hard disk drives, printers, electronic test equipment, and office electronics. The LM74 is available in the SOIC package as well as the 5-Bump DSBGA package.

Block Diagram

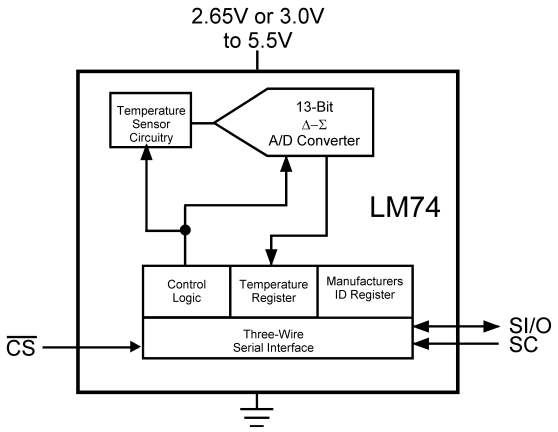

Figure 1.

Please be aware that an important notice concerning availability, standard warranty, and use in critical applications of Texas Instruments semiconductor products and disclaimers thereto appears at the end of this data sheet.

All trademarks are the property of their respective owners.

PRODUCTION DATA information is current as of publication date. Products conform to specifications per the terms of the Texas Instruments standard warranty. Production processing does not necessarily include testing of all parameters.

Copyright © 2000–2013, Texas Instruments Incorporated

Connection Diagram

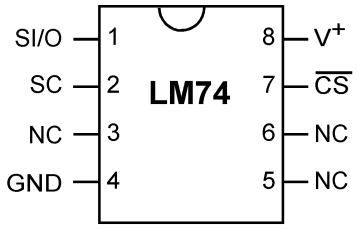

Figure 2. SOIC – Top View
See Package Number D

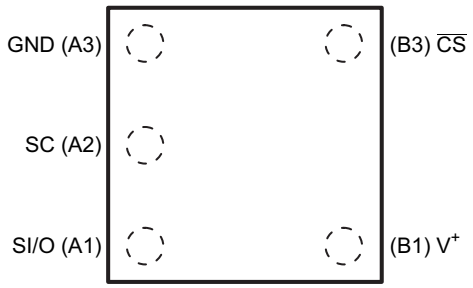

Figure 3. 5-Bump DSBGA – Top View
See Package Number YTA0005

PIN DESCRIPTIONS

Label	SOIC Pin #	DSBGA Pin #	Function	Typical Connection
SI/O	1	1	Slave Input/Output - Serial bus bi-directional data line. Schmitt trigger input.	From and to Controller
SC	2	5	Slave Clock - Serial bus clock Schmitt trigger input line.	From Controller
NC	3		No Connection	No Connection
GND	4	4	Power Supply Ground	Ground
NC	5		No Connection	No Connection
NC	6		No Connection	No Connection
$\overline{CS}$	7	3	Chip Select input.	From Controller
V^+	8	2	Positive Supply Voltage Input	DC Voltage from 3.0V to 5.5V for the LM74CIM and 2.65V to 5.5V for the LM74CIBP and LM74CITP. Bypass with a 0.1 µF ceramic capacitor.

Typical Application

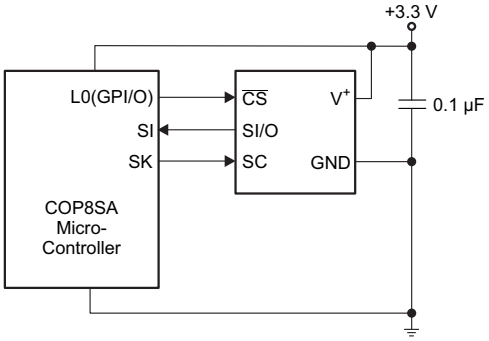

Figure 4. COP Microcontroller Interface

These devices have limited built-in ESD protection. The leads should be shorted together or the device placed in conductive foam during storage or handling to prevent electrostatic damage to the MOS gates.

Copyright © 2000–2013, Texas Instruments Incorporated

Absolute Maximum Ratings[1]

Supply Voltage	−0.3V to 6.0V
Voltage at any Pin	−0.3V to V^+ + 0.3V
Input Current at any Pin[2]	5 mA
Package Input Current[2]	20 mA
Storage Temperature	−65°C to +150°C
ESD Susceptibility[3]	
Human Body Model	
LM74CIBP and LM74CITP, pin A2 (SC)	1900V
LM74CIM,LM74CIBP, and LM74CITP all other pins	2000V
Machine Model	200V
Soldering process must comply with Reflow Temperature Profile specifications. See www.ti.com/packaging.[4]	

(1) Absolute Maximum Ratings indicate limits beyond which damage to the device may occur. DC and AC electrical specifications do not apply when operating the device beyond its rated operating conditions.
(2) When the input voltage (V_I) at any pin exceeds the power supplies (V_I < GND or V_I > $+V_S$) the current at that pin should be limited to 5 mA. The 20 mA maximum package input current rating limits the number of pins that can safely exceed the power supplies with an input current of 5 mA to four.
(3) Human body model, 100 pF discharged through a 1.5 kΩ resistor. Machine model, 200 pF discharged directly into each pin.
(4) Reflow temperature profiles are different for lead-free and non-lead-free packages.

Operating Ratings

Specified Temperature Range	T_{MIN} to T_{MAX}
See[1] LM74CIBP and LM74CITP LM74CIM	 −40°C to +125°C −55°C to +150°C
Supply Voltage Range ($+V_S$)	
LM74CIBP and LM74CITP	+2.65V to +5.5V
LM74CIM	+3.0V to +5.5V

(1) The life expectancy of the LM74 will be reduced when operating at elevated temperatures. LM74 θ_{JA} (thermal resistance, junction-to-ambient) when attached to a printed circuit board with 2 oz. foil is summarized as: Device Number LM74CIM Thermal Resistance (θ_{JA}) 160°C/W. Device Number LM74CIBP Thermal Resistance (θ_{JA}) 250°C/W. Device Number LM74CITP Thermal Resistance (θ_{JA}) 250°C/W.

Copyright © 2000–2013, Texas Instruments Incorporated

Temperature-to-Digital Converter Characteristics

Unless otherwise noted, these specifications apply for V^+ = 2.65V to 3.6V for the LM74CIBP -3, LM74CITP-3, V^+ = 3.0V to 3.6V for the LM74CIM -3 and V^+ = 4.5V to 5.5V for the LM74 -5[1]. **Boldface limits apply for $T_A = T_J = T_{MIN}$ to T_{MAX};** all other limits $T_A = T_J$=+25°C, unless otherwise noted.

Parameter		Conditions	Typical[2]	LM74-5 Limits[3]	LM74-3 Limits[3]	Units (Limit)
Temperature Error[1]		T_A = −10°C to +65°C		**±1.25**	**±1.25**	°C (max)
		T_A = −25°C to +110°C		**±2.1**	**+2.65/−2.15**	°C (max)
		T_A = −40°C to +85°C		**+2.65/−1.65**	**±2.15**	°C (max)
		T_A = −40°C to +110°C		**+2.65/ −2.0**	**+2.65/−2.15**	°C (max)
		T_A = −55°C to +125°C		**±3.0**	**±3.5**	°C (max)
		T_A = −55°C to +150°C		**±5.0**	**±5.0**	°C (max)
Resolution			13			Bits
Temperature Conversion Time	SOIC	See[4]	280	**425**	**425**	ms (max)
	DSBGA	See[4]	611	**925**	**925**	ms (max)
Quiescent Current	SOIC	Serial Bus Inactive	310	**520**	**520**	µA (max)
	DSBGA		265	**470**	**470**	µA (max)
	SOIC	Serial Bus Active	310			µA
	DSBGA		310			µA
	SOIC	Shutdown Mode, V^+ = 3.3V	7			µA
	DSBGA		3			µA
	SOIC	Shutdown Mode, V^+ = 5V	8			µA
	DSBGA		4			µA

(1) All SOP (LM74CIM) parts will function over the V^+ supply voltage range of 3V to 5.5V. All DSBGA (LM74SIBP and LM75CITP) parts will function over the V^+ supply voltage range of 2.65V to 5.5V. The SOP (LM74CIM) parts are tested and specified for rated temperature error at their nominal supply voltage for temperature ranges of −10°C to +65°C, −55°C to +125°C and −55°C to +150°C. For the SOP (LM74CIM) parts, the temperature error specifications for temperature ranges of −40°C to +85°C, −25°C to +110°C, and −40°C to +110°C include error induced by power supply variation of ±5% from the nominal value. For the LM74CIM (SOP) parts, the temperature error will increase by ±0.3°C for a power supply voltage (V^+) variation of ±10% from the nominal value.For the LM74CIBP-3 and LM74CITP-3 (DSBGA) parts all accuracies are ensured over the supply range of 2.65V to 3.6V, except for the temperature ranges of -55°C to 125°C and −55°C to +150°C where the accuracy applies for the nominal supply voltage of 3.3V. For the LM74CIBP-5 and LM74CITP-5 (DSBGA) parts all accuracies are guranteed over the supply range of 4.75V to 5.25V, except for the temperature ranges of -55°C to 125°C and −55°C to +150°C where the accuracy applies for the nominal supply voltage of 5.0V. For the LM74CIBP and LM74CITP over -55°C to 125°C and −55°C to +150°C, a power supply variation of ±10% will degrade the accuracy by ±0.3°C.
(2) Typicals are at T_A = 25°C and represent most likely parametric norm.
(3) Limits are specified to AOQL (Average Outgoing Quality Level).
(4) This specification is provided only to indicate how often temperature data is updated. The LM74 can be read at any time without regard to conversion state (and will yield last conversion result). A conversion in progress will not be interrupted. The output shift register will be updated at the completion of the read and a new conversion restarted.

Copyright © 2000–2013, Texas Instruments Incorporated

Logic Electrical Characteristics

DIGITAL DC CHARACTERISTICS

Unless otherwise noted, these specifications apply for V^+ = 2.65V to 3.6V for the LM74CIBP -3, LM74CITP-3, V^+ = 3.0V to 3.6V for the LM74CIM -3 and V^+ = 4.5V to 5.5V for the LM74 -5[1]. **Boldface limits apply for $T_A = T_J = T_{MIN}$ to T_{MAX};** all other limits $T_A = T_J$=+25°C, unless otherwise noted.

Symbol	Parameter	Conditions	Typical[2]	Limits[3]	Units (Limit)
$V_{IN(1)}$	Logical "1" Input Voltage			**V^+ × 0.7**	V (min)
				V^+ + 0.3	V (max)
$V_{IN(0)}$	Logical "0" Input Voltage			**−0.3**	V (min)
				V^+ × 0.3	V (max)
	Input Hysteresis Voltage	V^+ = 3.0V to 3.6V	0.8	**0.35**	V (min)
		V^+ = 4.5V to 5.5V	0.8	**0.33**	V (min)
$I_{IN(1)}$	Logical "1" Input Current	$V_{IN} = V^+$	0.005	**3.0**	µA (max)
$I_{IN(0)}$	Logical "0" Input Current	V_{IN} = 0V	−0.005	**−3.0**	µA (min)
C_{IN}	All Digital Inputs		20		pF
V_{OH}	High Level Output Voltage	I_{OH} = −400 µA		**2.4**	V (min)
V_{OL}	Low Level Output Voltage	I_{OL} = +2 mA		**0.4**	V (max)
$I_{O_TRI\text{-}STATE}$	TRI-STATE Output Leakage Current	V_O = GND $V_O = V^+$		**−1** **+1**	µA (min) µA (max)

(1) All SOP (LM74CIM) parts will function over the V^+ supply voltage range of 3V to 5.5V. All DSBGA (LM74SIBP and LM75CITP) parts will function over the V^+ supply voltage range of 2.65V to 5.5V. The SOP (LM74CIM) parts are tested and specified for rated temperature error at their nominal supply voltage for temperature ranges of −10°C to +65°C, −55°C to +125°C and −55°C to +150°C. For the SOP (LM74CIM) parts, the temperature error specifications for temperature ranges of −40°C to +85°C, −25°C to +110°C, and −40°C to +110°C include error induced by power supply variation of ±5% from the nominal value. For the LM74CIM (SOP) parts, the temperature error will increase by ±0.3°C for a power supply voltage (V^+) variation of ±10% from the nominal value.For the LM74CIBP-3 and LM74CITP-3 (DSBGA) parts all accuracies are ensured over the supply range of 2.65V to 3.6V, except for the temperature ranges of -55°C to 125°C and −55°C to +150°C where the accuracy applies for the nominal supply voltage of 3.3V. For the LM74CIBP-5 and LM74CITP-5 (DSBGA) parts all accuracies are guranteed over the supply range of 4.75V to 5.25V, except for the temperature ranges of -55°C to 125°C and −55°C to +150°C where the accuracy applies for the nominal supply voltage of 5.0V. For the LM74CIBP and LM74CITP over -55°C to 125°C and −55°C to +150°C, a power supply variation of ±10% will degrade the accuracy by ±0.3°C.
(2) Typicals are at T_A = 25°C and represent most likely parametric norm.
(3) Limits are specified to AOQL (Average Outgoing Quality Level).

SERIAL BUS DIGITAL SWITCHING CHARACTERISTICS

Unless otherwise noted, these specifications apply for V^+ = 2.65V to 3.6V for the LM74CIBP -3, LM74CITP-3, V^+ = 3.0V to 3.6V for the LM74CIM -3 and V^+ = 4.5V to 5.5V for the LM74 -5[(1)]; C_L (load capacitance) on output lines = 100 pF unless otherwise specified. **Boldface limits apply for $T_A = T_J = T_{MIN}$ to T_{MAX};** all other limits $T_A = T_J$ = +25°C, unless otherwise noted.

Symbol	Parameter	Conditions	Typical[(2)]	Limits[(3)]	Units (Limit)
t_1	SC (Clock) Period			**0.16** DC	µs (min) (max)
t_2	$\overline{CS}$ Low to SC (Clock) High Set-Up Time			**100**	ns (min)
t_3	$\overline{CS}$ Low to Data Out (SO) Delay			**70**	ns (max)
t_4	SC (Clock) Low to Data Out (SO) Delay			**100**	ns (max)
t_5	$\overline{CS}$ High to Data Out (SO) TRI-STATE			**200**	ns (max)
t_6	SC (Clock) High to Data In (SI) Hold Time			**50**	ns (min)
t_7	Data In (SI) Set-Up Time to SC (Clock) High			**30**	ns (min)

(1) All SOP (LM74CIM) parts will function over the V^+ supply voltage range of 3V to 5.5V. All DSBGA (LM74SIBP and LM75CITP) parts will function over the V^+ supply voltage range of 2.65V to 5.5V. The SOP (LM74CIM) parts are tested and specified for rated temperature error at their nominal supply voltage for temperature ranges of −10°C to +65°C, −55°C to +125°C and −55°C to +150°C. For the SOP (LM74CIM) parts, the temperature error specifications for temperature ranges of −40°C to +85°C, −25°C to +110°C, and −40°C to +110°C include error induced by power supply variation of ±5% from the nominal value. For the LM74CIM (SOP) parts, the temperature error will increase by ±0.3°C for a power supply voltage (V^+) variation of ±10% from the nominal value.For the LM74CIBP-3 and LM74CITP-3 (DSBGA) parts all accuracies are ensured over the supply range of 2.65V to 3.6V, except for the temperature ranges of -55°C to 125°C and −55°C to +150°C where the accuracy applies for the nominal supply voltage of 3.3V. For the LM74CIBP-5 and LM74CITP-5 (DSBGA) parts all accuracies are guranteed over the supply range of 4.75V to 5.25V, except for the temperature ranges of -55°C to 125°C and −55°C to +150°C where the accuracy applies for the nominal supply voltage of 5.0V. For the LM74CIBP and LM74CITP over -55°C to 125°C and −55°C to +150°C, a power supply variation of ±10% will degrade the accuracy by ±0.3°C.
(2) Typicals are at T_A = 25°C and represent most likely parametric norm.
(3) Limits are specified to AOQL (Average Outgoing Quality Level).

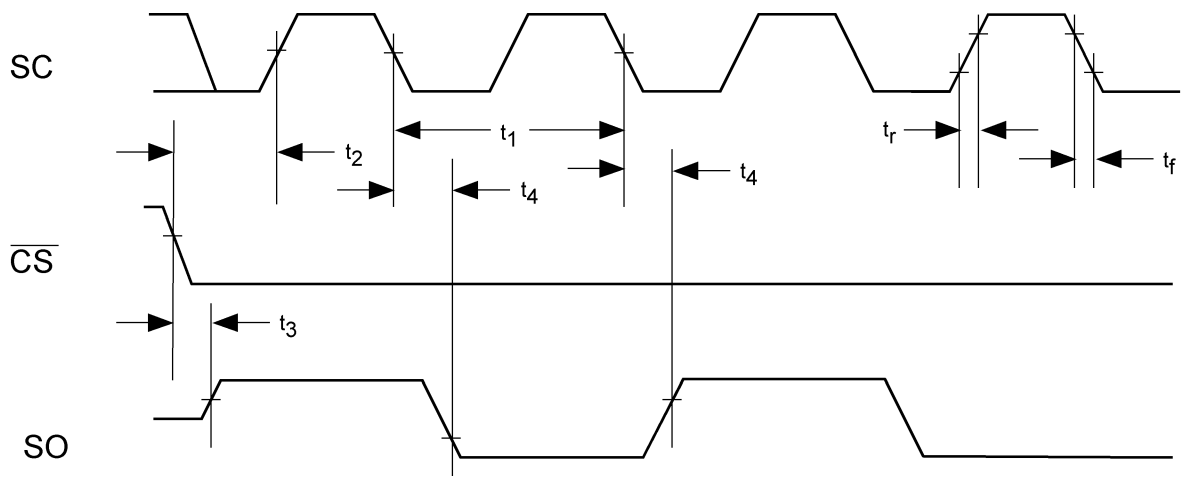

Figure 5. Data Output Timing Diagram

Copyright © 2000–2013, Texas Instruments Incorporated

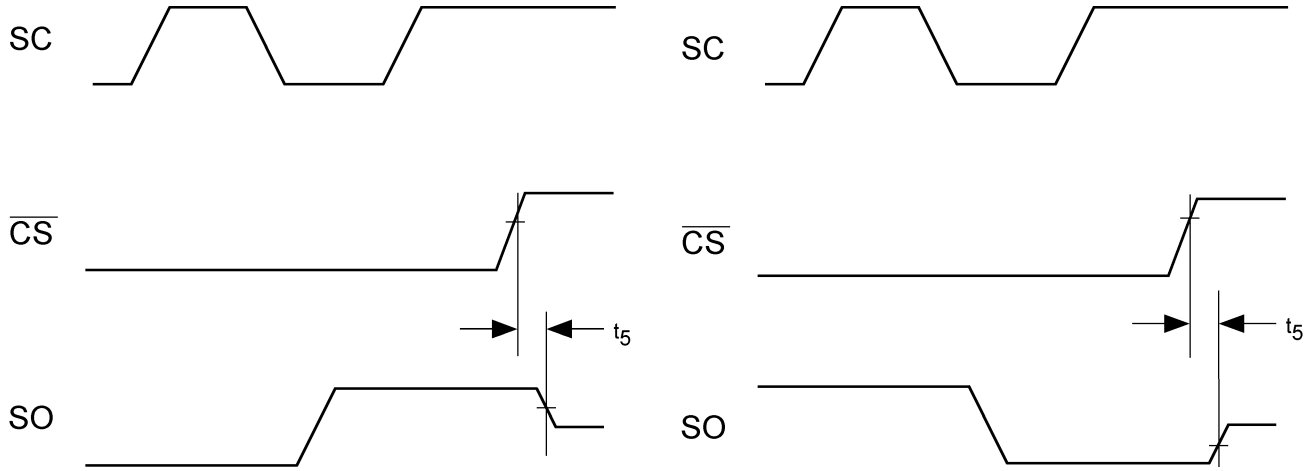

Figure 6. TRI-STATE Data Output Timing Diagram

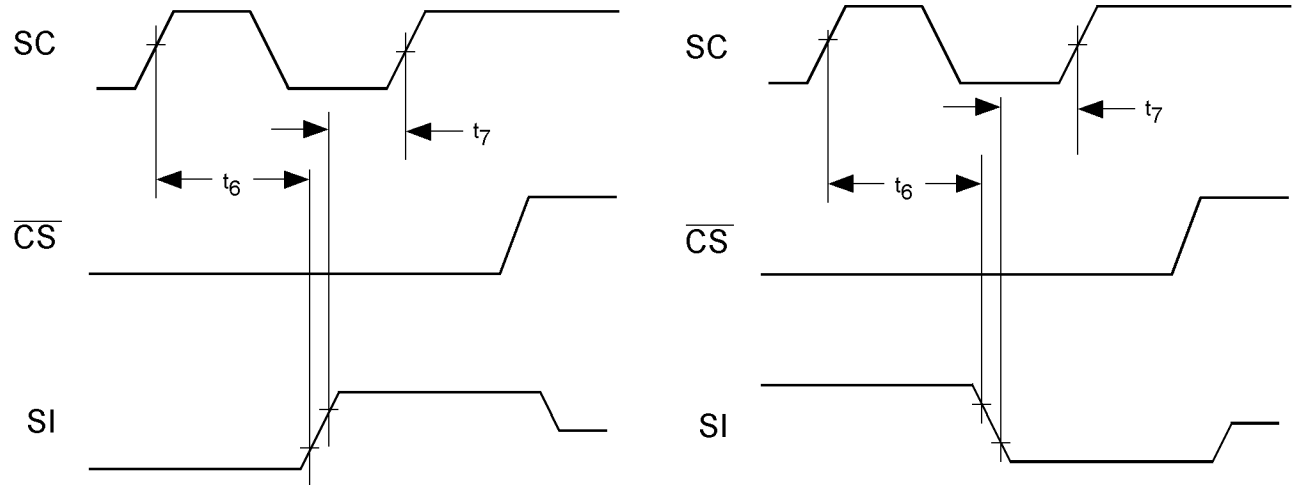

Figure 7. Data Input Timing Diagram

Electrical Characteristics

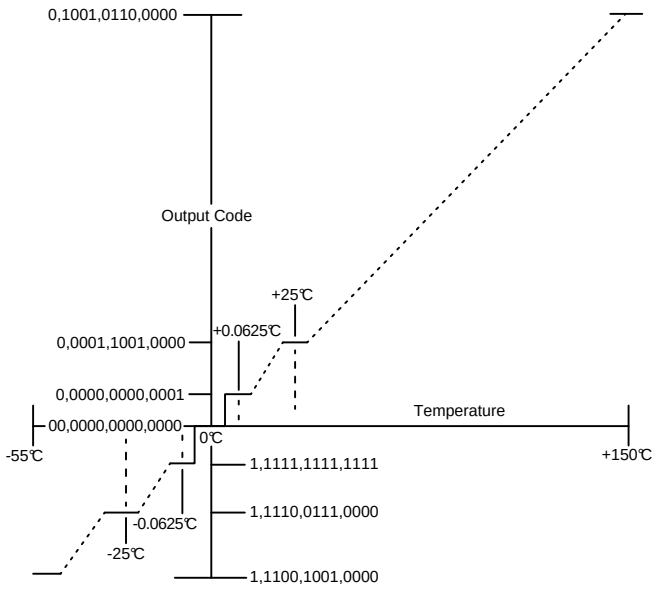

Figure 8. Temperature-to-Digital Transfer Function (Non-linear scale for clarity)

TRI-STATE Test Circuit

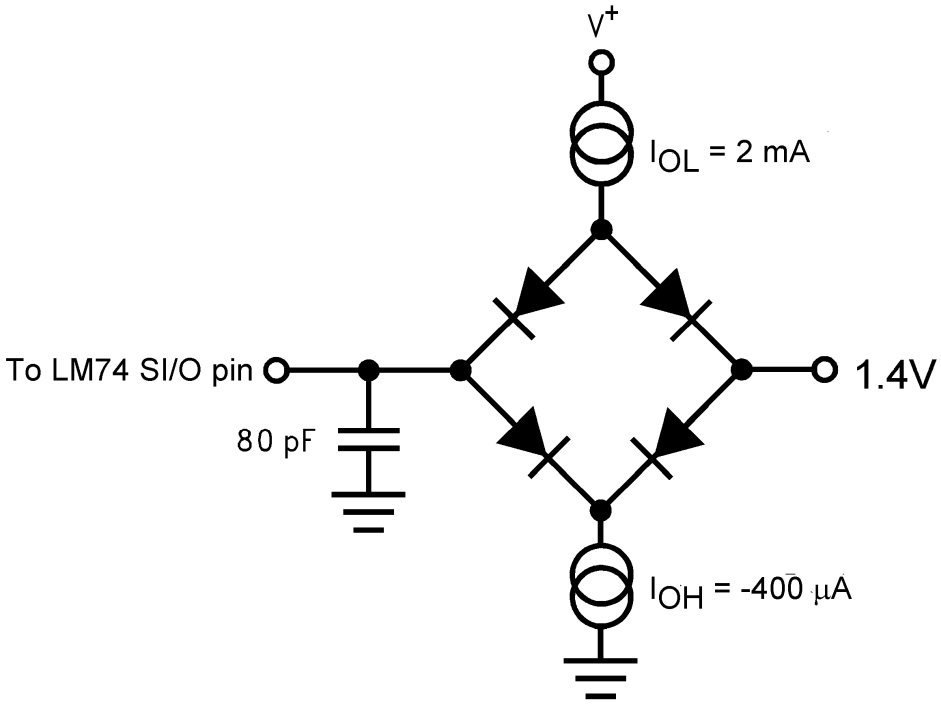

Figure 9.

Copyright © 2000–2013, Texas Instruments Incorporated

Typical Performance Characteristics

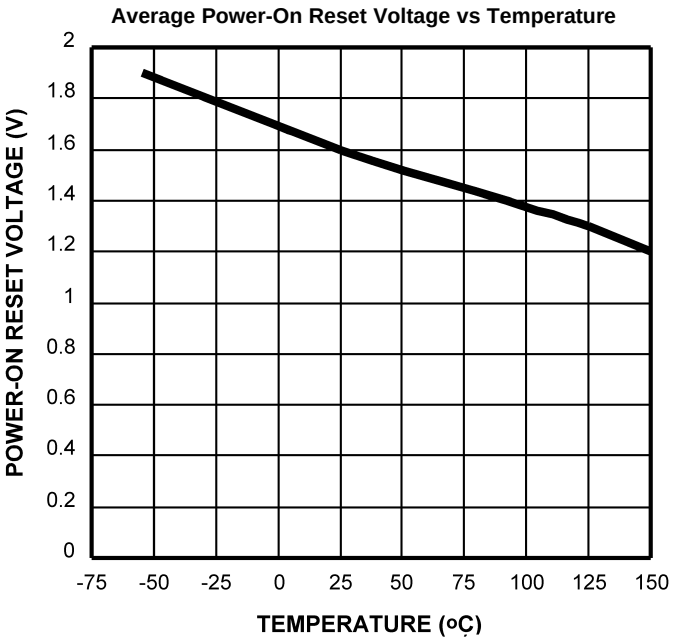

Figure 10.

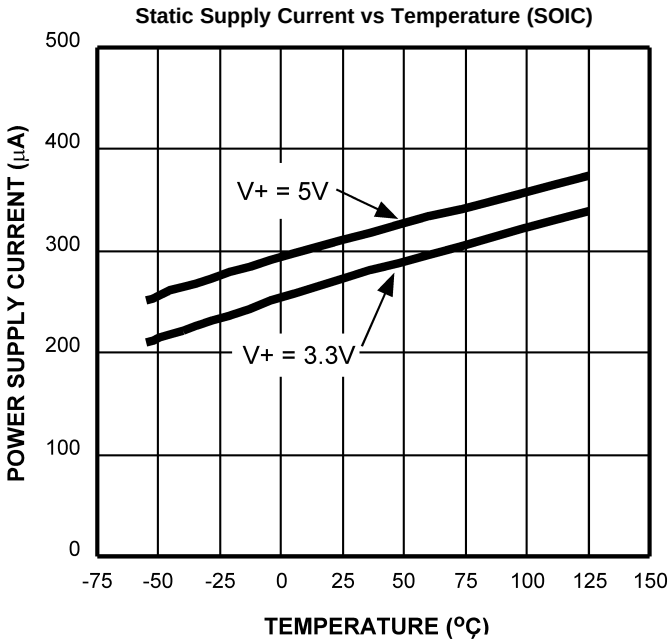

Figure 11.

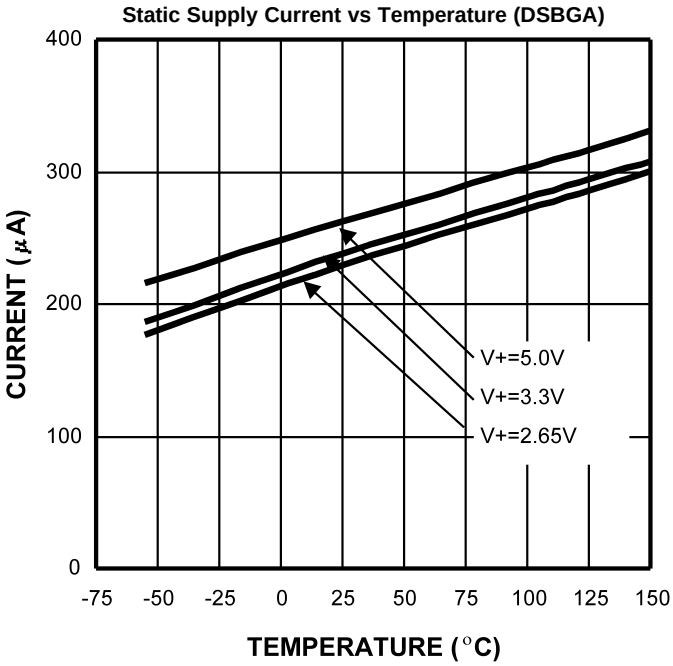

Figure 12.

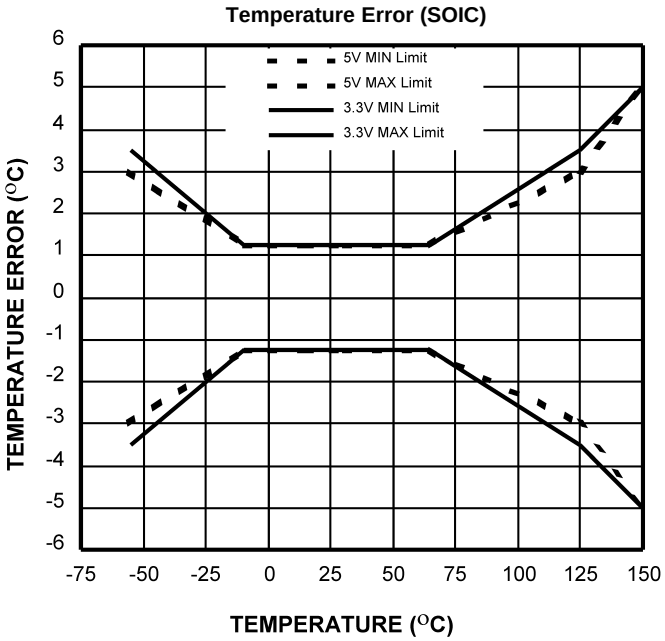

Figure 13.

FUNCTIONAL DESCRIPTION

The LM74 temperature sensor incorporates a band-gap type temperature sensor and 12-bit plus sign ΔΣ ADC (Delta-Sigma Analog-to-Digital Converter). Compatibility of the LM74's three wire serial interface with SPI and MICROWIRE allows simple communications with common microcontrollers and processors. Shutdown mode can be used to optimize current drain for different applications. A Manufacture's/Device ID register identifies the LM74 as Texas Instruments product.

Power Up and Power Down

When the supply voltage is less than about 1.6V (typical), the LM74 is considered powered down. The LM74 always powers up in a known state. When the supply voltage rises above 1.6V (typical), an internal Power-On Reset (POR) occurs and the temperature register will then contain a value of 1111 1111 0000 00XX, where XX indicates undefined values. See Temperature Register (after power-up, before first complete temperature conversion) diagram for contents after POR but before completion of the first temperature conversion.

The LM74 power-up default condition is continuous conversion mode. After completion of the first full temperature conversion, the register will contain temperature measurement data in bits D15 (the temperature data MSB) through D3 (the temperature data LSB). Bit D2 will be fixed high; bits D1 and D0 are undefined. See Section 1.5.3 for a diagram of the Temperature Regisiter contents after the first complete temperature conversion. Note that bit D2 represents a complete conversion flag. During POR it is low and, after the first temperature conversion is complete, it goes high. This bit can be polled to indicate when the POR data in the Temperature Register has been replaced with valid temperature data.

After the first conversion, and any subsequent conversions, the value in the temperature register does not change until the completion of the next conversion, at which time the temperature register is updated with the latest temperature value.

Serial Bus Interface

The LM74 operates as a slave and is compatible with SPI or MICROWIRE bus specifications. Data is clocked out on the falling edge of the serial clock (SC), while data is clocked in on the rising edge of SC. A complete transmit/receive communication will consist of 32 serial clocks. The first 16 clocks comprise the transmit phase of communication, while the second 16 clocks are the receive phase.

When $\overline{CS}$ is high SI/O will be in TRI-STATE. Communication should be initiated by taking chip select ($\overline{CS}$) low. This should not be done when SC is changing from a low to high state. Once $\overline{CS}$ is low the serial I/O pin (SI/O) will transmit the first bit of data. The master can then read this bit with the rising edge of SC. The remainder of the data will be clocked out by the falling edge of SC. Once the 14 bits of data (one sign bit, twelve temperature bits and 1 high bit) are transmitted the SI/O line will go into TRI-STATE. $\overline{CS}$ can be taken high at any time during the transmit phase. If $\overline{CS}$ is brought low in the middle of a conversion the LM74 will complete the conversion and the output shift register will be updated after $\overline{CS}$ is brought back high.

The receive phase of a communication starts after 16 SC periods. $\overline{CS}$ can remain low for 32 SC cycles. The LM74 will read the data available on the SI/O line on the rising edge of the serial clock. Input data is to an 8-bit shift register. The part will detect the last eight bits shifted into the register. The receive phase can last up to 16 SC periods. All ones must be shifted in order to place the part into shutdown. A zero in any location will take the LM74 out of shutdown. The following codes should only be transmitted to the LM74:

- 00 hex
- 01 hex
- 03 hex
- 07 hex
- 0F hex
- 1F hex
- 3F hex
- 7F hex
- FF hex

any others may place the part into a Test Mode. Test Modes are used by Texas Instruments to thoroughly test the function of the LM74 during production testing. Only eight bits have been defined above since only the last eight transmitted are detected by the LM74, before $\overline{CS}$ is taken HIGH.

Copyright © 2000–2013, Texas Instruments Incorporated

The following communication can be used to determine the Manufacturer's/Device ID and then immediately place the part into continuous conversion mode. With $\overline{CS}$ continuously low:

- Read 16 bits of temperature data
- Write 16 bits of data commanding shutdown
- Read 16 bits of Manufacture's/Device ID data
- Write 8 to 16 bits of data commanding Conversion Mode
- Take $\overline{CS}$ HIGH.

Note that one complete temperature conversion period will have to pass before the LM74 Temperature register will contain the new temperature data. Until then, it will contain a "stale" temperature (the data that was in the register before going into shutdown mode).

Temperature Data Format

Temperature data is represented by a 13-bit, two's complement word with an LSB (Least Significant Bit) equal to 0.0625°C:

Temperature	Digital Output	
	Binary	Hex
+150°C	0100 1011 0000 0111	4B 07h
+125°C	0011 1110 1000 0111	3E 87h
+25°C	0000 1100 1000 0111	0C 87h
+0.0625°C	0000 0000 0000 1111	00 0Fh
0°C	0000 0000 0000 0111	00 07h
−0.0625°C	1111 1111 1111 1111	FF FFh
−25°C	1111 0011 1000 0111	F3 87h
−55°C	1110 0100 1000 0111	E4 87h

Note: The last two bits are TRI-STATE and depicted as one in the table.

The first data byte is the most significant byte with most significant bit first, permitting only as much data as necessary to be read to determine temperature condition. For instance, if the first four bits of the temperature data indicate an overtemperature condition, the host processor could immediately take action to remedy the excessive temperatures.

Shutdown Mode/Manufacturer's ID

Shutdown mode is enabled by writing XX FF to the LM74 as shown in Figure 16c. The serial bus is still active when the LM74 is in shutdown. Current draw drops to less than 10 µA between serial communications. When in shutdown mode the LM74 always will output 1000 0000 0000 00XX. This is the manufacturer's/Device ID information. The first 5-bits of the field (1000 0XXX) are reserved for manufacturer's ID. As mentioned in Section 1.2, writing a zero to the LM74 configuration register will take it out of shutdown mode and place it in conversion mode. In other words, any valid code listed in Section 1.2 other than XX FF will put it in conversion mode. After leaving shutdown, but before the first temperature conversion is complete, the temperature register will contain the last measured temperature which resided in the temperature register before entering shutdown mode. After the completion of the first conversion, the temperature register will be updated with the new temperature data.

Internal Register Structure

The LM74 has three registers, the temperature register, the configuration register and the manufacturer's/device identification register. The temperature and manufacturer's/device identification registers are read only. The configuration register is write only.

Configuration Register

(Selects shutdown or continuous conversion modes):

Table 1. (Write Only):

D15	D14	D13	D12	D11	D10	D9	D8	D7	D6	D5	D4	D3	D2	D1	D0
X	X	X	X	X	X	X	X	Shutdown							

D0–D15 set to XX FF hex enables shutdown mode.

D0–D15 set to 00 00 hex sets Continuous conversion mode.

Note: setting D0-D15 to any other values may place the LM74 into a manufacturer's test mode, upon which the LM74 will stop responding as described. These test modes are to be used for Texas Instruments production testing only. See Serial Bus Interface for a complete discussion.

Temperature Register (after power-up, before first complete temperature conversion)

Table 2. (Read Only):

D15	D14	D13	D12	D11	D10	D9	D8	D7	D6	D5	D4	D3	D2	D1	D0
1	1	1	1	1	1	1	1	0	0	0	0	0	0	X	X

D0–D1: Undefined. TRI-STATE will be output on SI/0.

D2–D15: Power-on Reset (POR) values.

Temperature Register (after completion of first temperature conversion)

Table 3. (Read Only):

D15	D14	D13	D12	D11	D10	D9	D8	D7	D6	D5	D4	D3	D2	D1	D0
MSB	Bit 11	Bit 10	Bit 9	Bit 8	Bit 7	Bit 6	Bit 5	Bit 4	Bit 3	Bit 2	Bit 1	LSB	1	X	X

D0–D1: Undefined. TRI-STATE will be output on SI/0.

D2: High.

D3–D15: Temperature Data. One LSB = 0.0625°C. Two's complement format.

Manufacturer's Device ID Register

Table 4. (Read Only):

D15	D14	D13	D12	D11	D10	D9	D8	D7	D6	D5	D4	D3	D2	D1	D0
1	0	0	0	0	0	0	0	0	0	0	0	0	0	X	X

D0–D1: Undefined. TRI-STATE will be output on SI/0.

D2–D15: Manufacturer's/Device ID Data. This register is accessed whenever the LM74 is in shutdown mode.

Copyright © 2000–2013, Texas Instruments Incorporated

Serial Bus Timing Diagrams

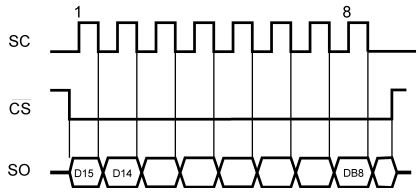

Figure 14. a) Reading Continuous Conversion - Single Eight-Bit Frame

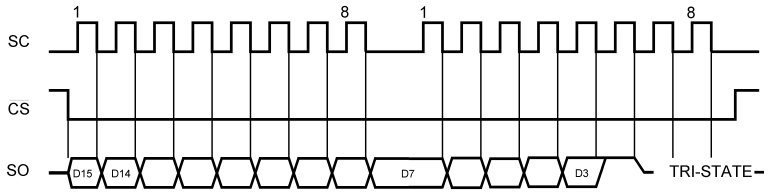

Figure 15. b) Reading Continuous Conversion - Two Eight-Bit Frames

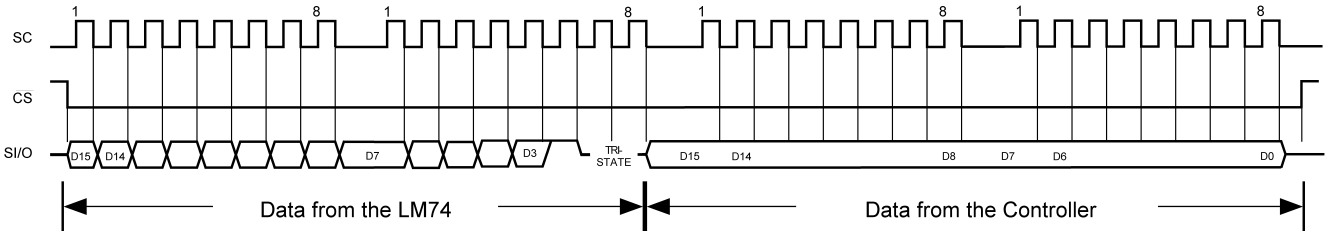

Figure 16. c) Writing Shutdown Control

Application Hints

To get the expected results when measuring temperature with an integrated circuit temperature sensor like the LM74, it is important to understand that the sensor measures its own die temperature. For the LM74, the best thermal path between the die and the outside world is through the LM74's pins. In the SOIC package all the pins on the LM74 will have an equal effect on the die temperature. Because the pins represent a good thermal path to the LM74 die, the LM74 will provide an accurate measurement of the temperature of the printed circuit board on which it is mounted. There is a less efficient thermal path between the plastic package and the LM74 die. If the ambient air temperature is significantly different from the printed circuit board temperature, it will have a small effect on the measured temperature.

In probe-type applications, the LM74 can be mounted inside a sealed-end metal tube, and can then be dipped into a bath or screwed into a threaded hole in a tank. As with any IC, the LM74 and accompanying wiring and circuits must be kept insulated and dry, to avoid leakage and corrosion. This is especially true if the circuit may operate at cold temperatures where condensation can occur. Printed-circuit coatings and varnishes such as Humiseal and epoxy paints or dips are often used to insure that moisture cannot corrode the LM74 or its connections.

DSBGA Light Sensitivity

The LM74 in the DSBGA package should not be exposed to ultraviolet light. The DSBGA package does not completely encapsulate the LM74 die in epoxy. Exposing the LM74 DSBGA package to bright sunlight will not immediatly cause a change in the output reading. Our experiments show that directly exposing the circuit side (bump side) of the die to high intensity (≥ 1mW/cm^2) ultraviolet light, centered at a wavelength of 254nm, for greater than 20 minutes will deprogram the EEPROM cells in the LM74. Since the EEPROM is used for storing calibration coefficients, the LM74 will function but the temperature accuracy will no longer be as specified. Light can penetrate through the side of the package as well, so exposure to ultra violet radiation is not recommended even after mounting.

Copyright © 2000–2013, Texas Instruments Incorporated

Typical Applications

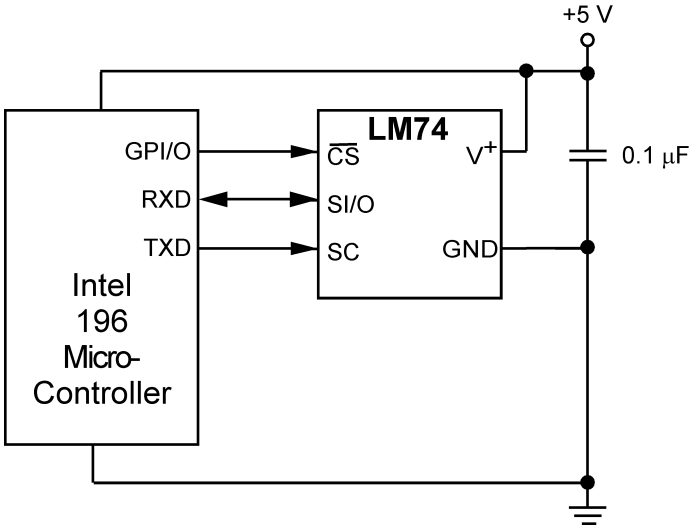

Figure 17. Temperature monitor using Intel 196 processor

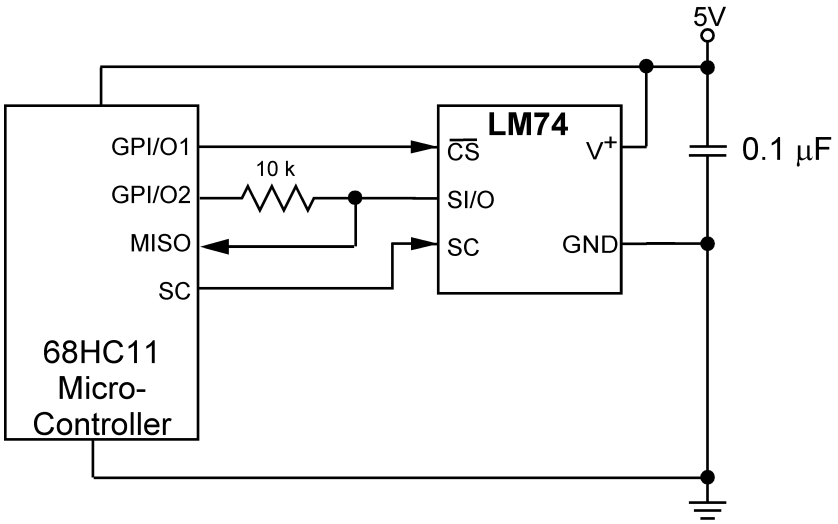

Figure 18. LM74 digital input control using microcontroller's general purpose I/O.

Copyright © 2000–2013, Texas Instruments Incorporated

REVISION HISTORY

Changes from Revision J (March 2013) to Revision K	Page
• Changed layout of National Data Sheet to TI format	14

PACKAGING INFORMATION

Orderable Device	Status (1)	Package Type	Package Drawing	Pins	Package Qty	Eco Plan (2)	Lead/Ball Finish (6)	MSL Peak Temp (3)	Op Temp (°C)	Device Marking (4/5)	Samples
LM74CIM-3	NRND	SOIC	D	8	95	TBD	Call TI	Call TI	-55 to 150	LM74 CIM3	
LM74CIM-3/NOPB	ACTIVE	SOIC	D	8	95	Green (RoHS & no Sb/Br)	CU SN	Level-1-260C-UNLIM	-55 to 150	LM74 CIM3	Samples
LM74CIM-5	NRND	SOIC	D	8	95	TBD	Call TI	Call TI	-55 to 150	LM74 CIM5	
LM74CIM-5/NOPB	ACTIVE	SOIC	D	8	95	Green (RoHS & no Sb/Br)	CU SN	Level-1-260C-UNLIM	-55 to 150	LM74 CIM5	Samples
LM74CIMX-3	NRND	SOIC	D	8	2500	TBD	Call TI	Call TI	-55 to 150	LM74 CIM3	
LM74CIMX-3/NOPB	ACTIVE	SOIC	D	8	2500	Green (RoHS & no Sb/Br)	CU SN	Level-1-260C-UNLIM	-55 to 150	LM74 CIM3	Samples
LM74CIMX-5	NRND	SOIC	D	8	2500	TBD	Call TI	Call TI	-55 to 150	LM74 CIM5	
LM74CIMX-5/NOPB	ACTIVE	SOIC	D	8	2500	Green (RoHS & no Sb/Br)	CU SN	Level-1-260C-UNLIM	-55 to 150	LM74 CIM5	Samples
LM74CITP-3/NOPB	ACTIVE	DSBGA	YTA	5	250	Green (RoHS & no Sb/Br)	SNAGCU	Level-1-260C-UNLIM	-40 to 125	10	Samples
LM74CITPX-3/NOPB	ACTIVE	DSBGA	YTA	5	3000	Green (RoHS & no Sb/Br)	SNAGCU	Level-1-260C-UNLIM	-40 to 125	10	Samples

(1) The marketing status values are defined as follows:
ACTIVE: Product device recommended for new designs.
LIFEBUY: TI has announced that the device will be discontinued, and a lifetime-buy period is in effect.
NRND: Not recommended for new designs. Device is in production to support existing customers, but TI does not recommend using this part in a new design.
PREVIEW: Device has been announced but is not in production. Samples may or may not be available.
OBSOLETE: TI has discontinued the production of the device.

(2) Eco Plan - The planned eco-friendly classification: Pb-Free (RoHS), Pb-Free (RoHS Exempt), or Green (RoHS & no Sb/Br) - please check http://www.ti.com/productcontent for the latest availability information and additional product content details.
TBD: The Pb-Free/Green conversion plan has not been defined.
Pb-Free (RoHS): TI's terms "Lead-Free" or "Pb-Free" mean semiconductor products that are compatible with the current RoHS requirements for all 6 substances, including the requirement that lead not exceed 0.1% by weight in homogeneous materials. Where designed to be soldered at high temperatures, TI Pb-Free products are suitable for use in specified lead-free processes.
Pb-Free (RoHS Exempt): This component has a RoHS exemption for either 1) lead-based flip-chip solder bumps used between the die and package, or 2) lead-based die adhesive used between the die and leadframe. The component is otherwise considered Pb-Free (RoHS compatible) as defined above.
Green (RoHS & no Sb/Br): TI defines "Green" to mean Pb-Free (RoHS compatible), and free of Bromine (Br) and Antimony (Sb) based flame retardants (Br or Sb do not exceed 0.1% by weight in homogeneous material)

(3) MSL, Peak Temp. - The Moisture Sensitivity Level rating according to the JEDEC industry standard classifications, and peak solder temperature.

(4) There may be additional marking, which relates to the logo, the lot trace code information, or the environmental category on the device.

(5) Multiple Device Markings will be inside parentheses. Only one Device Marking contained in parentheses and separated by a "~" will appear on a device. If a line is indented then it is a continuation of the previous line and the two combined represent the entire Device Marking for that device.

(6) Lead/Ball Finish - Orderable Devices may have multiple material finish options. Finish options are separated by a vertical ruled line. Lead/Ball Finish values may wrap to two lines if the finish value exceeds the maximum column width.

Important Information and Disclaimer: The information provided on this page represents TI's knowledge and belief as of the date that it is provided. TI bases its knowledge and belief on information provided by third parties, and makes no representation or warranty as to the accuracy of such information. Efforts are underway to better integrate information from third parties. TI has taken and continues to take reasonable steps to provide representative and accurate information but may not have conducted destructive testing or chemical analysis on incoming materials and chemicals. TI and TI suppliers consider certain information to be proprietary, and thus CAS numbers and other limited information may not be available for release.

In no event shall TI's liability arising out of such information exceed the total purchase price of the TI part(s) at issue in this document sold by TI to Customer on an annual basis.

TAPE AND REEL INFORMATION

REEL DIMENSIONS

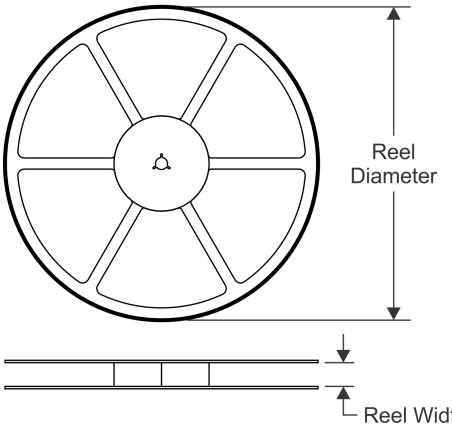

TAPE DIMENSIONS

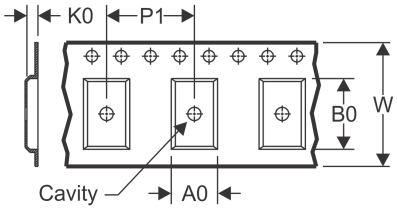

A0	Dimension designed to accommodate the component width
B0	Dimension designed to accommodate the component length
K0	Dimension designed to accommodate the component thickness
W	Overall width of the carrier tape
P1	Pitch between successive cavity centers

QUADRANT ASSIGNMENTS FOR PIN 1 ORIENTATION IN TAPE

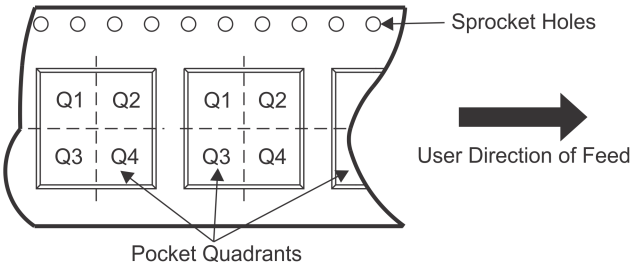

*All dimensions are nominal

Device	Package Type	Package Drawing	Pins	SPQ	Reel Diameter (mm)	Reel Width W1 (mm)	A0 (mm)	B0 (mm)	K0 (mm)	P1 (mm)	W (mm)	Pin1 Quadrant
LM74CIMX-3	SOIC	D	8	2500	330.0	12.4	6.5	5.4	2.0	8.0	12.0	Q1
LM74CIMX-3/NOPB	SOIC	D	8	2500	330.0	12.4	6.5	5.4	2.0	8.0	12.0	Q1
LM74CIMX-5	SOIC	D	8	2500	330.0	12.4	6.5	5.4	2.0	8.0	12.0	Q1
LM74CIMX-5/NOPB	SOIC	D	8	2500	330.0	12.4	6.5	5.4	2.0	8.0	12.0	Q1
LM74CITP-3/NOPB	DSBGA	YTA	5	250	178.0	8.4	1.7	1.7	0.76	4.0	8.0	Q1
LM74CITPX-3/NOPB	DSBGA	YTA	5	3000	178.0	8.4	1.7	1.7	0.76	4.0	8.0	Q1

TAPE AND REEL BOX DIMENSIONS

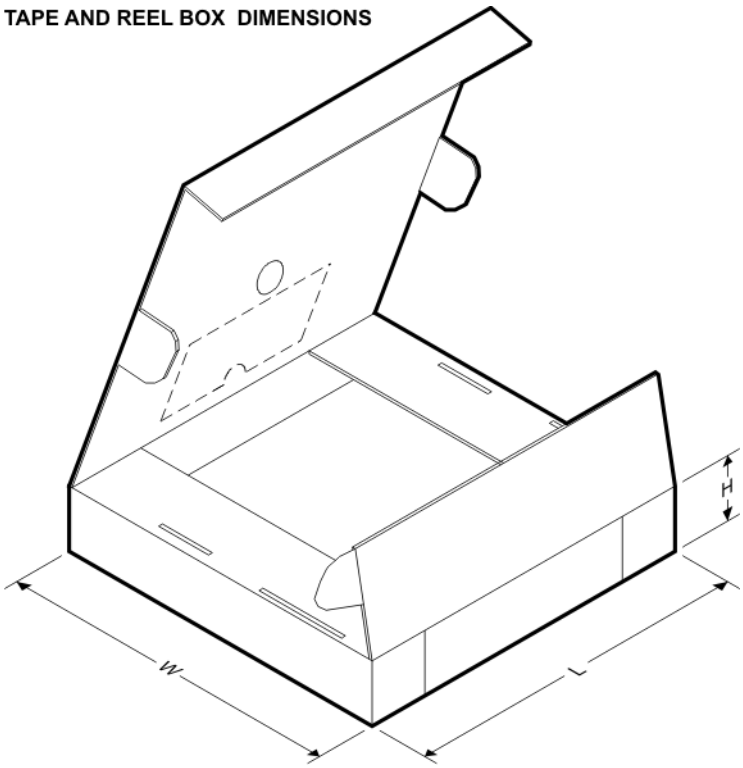

*All dimensions are nominal

Device	Package Type	Package Drawing	Pins	SPQ	Length (mm)	Width (mm)	Height (mm)
LM74CIMX-3	SOIC	D	8	2500	367.0	367.0	35.0
LM74CIMX-3/NOPB	SOIC	D	8	2500	367.0	367.0	35.0
LM74CIMX-5	SOIC	D	8	2500	367.0	367.0	35.0
LM74CIMX-5/NOPB	SOIC	D	8	2500	367.0	367.0	35.0
LM74CITP-3/NOPB	DSBGA	YTA	5	250	210.0	185.0	35.0
LM74CITPX-3/NOPB	DSBGA	YTA	5	3000	210.0	185.0	35.0

D (R–PDSO–G8) PLASTIC SMALL OUTLINE

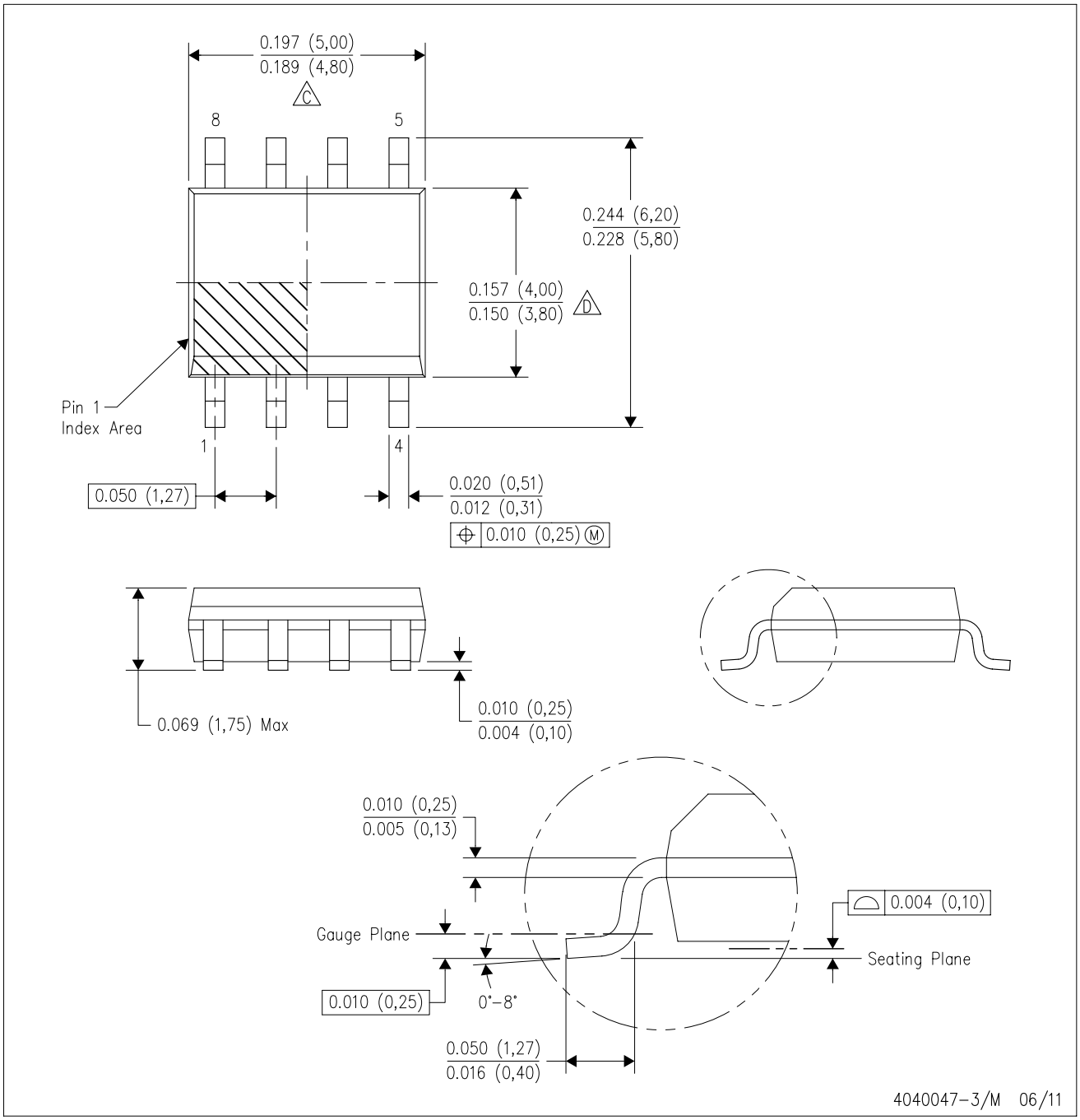

NOTES:
A. All linear dimensions are in inches (millimeters).
B. This drawing is subject to change without notice.
C. Body length does not include mold flash, protrusions, or gate burrs. Mold flash, protrusions, or gate burrs shall not exceed 0.006 (0,15) each side.
D. Body width does not include interlead flash. Interlead flash shall not exceed 0.017 (0,43) each side.
E. Reference JEDEC MS–012 variation AA.

YTA0005

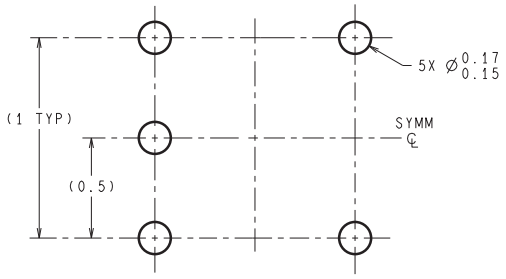

LAND PATTERN RECOMMENDATION

DIMENSIONS ARE IN MILLIMETERS
DIMENSIONS IN ( ) FOR REFERENCE ONLY

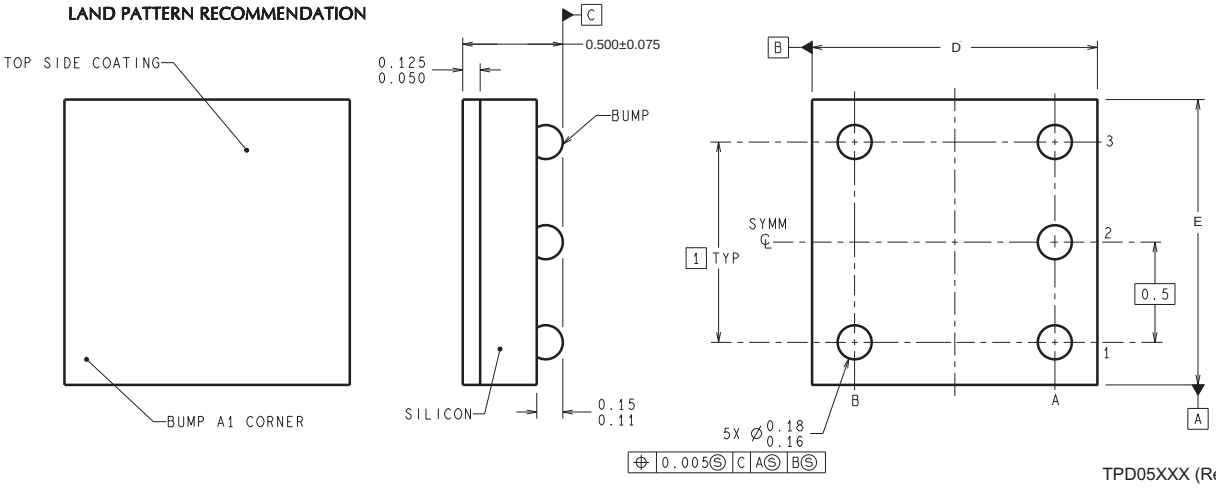

TPD05XXX (Rev A)

D: Max = 1.667 mm, Min =1.606 mm

E: Max = 1.616 mm, Min =1.555 mm

4215103/A 12/12

NOTES: A. All linear dimensions are in millimeters. Dimensioning and tolerancing per ASME Y14.5M-1994.
B. This drawing is subject to change without notice.

IMPORTANT NOTICE FOR TI DESIGN INFORMATION AND RESOURCES

Texas Instruments Incorporated ('TI") technical, application or other design advice, services or information, including, but not limited to, reference designs and materials relating to evaluation modules, (collectively, "TI Resources") are intended to assist designers who are developing applications that incorporate TI products; by downloading, accessing or using any particular TI Resource in any way, you (individually or, if you are acting on behalf of a company, your company) agree to use it solely for this purpose and subject to the terms of this Notice.

TI's provision of TI Resources does not expand or otherwise alter TI's applicable published warranties or warranty disclaimers for TI products, and no additional obligations or liabilities arise from TI providing such TI Resources. TI reserves the right to make corrections, enhancements, improvements and other changes to its TI Resources.

You understand and agree that you remain responsible for using your independent analysis, evaluation and judgment in designing your applications and that you have full and exclusive responsibility to assure the safety of your applications and compliance of your applications (and of all TI products used in or for your applications) with all applicable regulations, laws and other applicable requirements. You represent that, with respect to your applications, you have all the necessary expertise to create and implement safeguards that (1) anticipate dangerous consequences of failures, (2) monitor failures and their consequences, and (3) lessen the likelihood of failures that might cause harm and take appropriate actions. You agree that prior to using or distributing any applications that include TI products, you will thoroughly test such applications and the functionality of such TI products as used in such applications. TI has not conducted any testing other than that specifically described in the published documentation for a particular TI Resource.

You are authorized to use, copy and modify any individual TI Resource only in connection with the development of applications that include the TI product(s) identified in such TI Resource. NO OTHER LICENSE, EXPRESS OR IMPLIED, BY ESTOPPEL OR OTHERWISE TO ANY OTHER TI INTELLECTUAL PROPERTY RIGHT, AND NO LICENSE TO ANY TECHNOLOGY OR INTELLECTUAL PROPERTY RIGHT OF TI OR ANY THIRD PARTY IS GRANTED HEREIN, including but not limited to any patent right, copyright, mask work right, or other intellectual property right relating to any combination, machine, or process in which TI products or services are used. Information regarding or referencing third-party products or services does not constitute a license to use such products or services, or a warranty or endorsement thereof. Use of TI Resources may require a license from a third party under the patents or other intellectual property of the third party, or a license from TI under the patents or other intellectual property of TI.

TI RESOURCES ARE PROVIDED "AS IS" AND WITH ALL FAULTS. TI DISCLAIMS ALL OTHER WARRANTIES OR REPRESENTATIONS, EXPRESS OR IMPLIED, REGARDING TI RESOURCES OR USE THEREOF, INCLUDING BUT NOT LIMITED TO ACCURACY OR COMPLETENESS, TITLE, ANY EPIDEMIC FAILURE WARRANTY AND ANY IMPLIED WARRANTIES OF MERCHANTABILITY, FITNESS FOR A PARTICULAR PURPOSE, AND NON-INFRINGEMENT OF ANY THIRD PARTY INTELLECTUAL PROPERTY RIGHTS.

TI SHALL NOT BE LIABLE FOR AND SHALL NOT DEFEND OR INDEMNIFY YOU AGAINST ANY CLAIM, INCLUDING BUT NOT LIMITED TO ANY INFRINGEMENT CLAIM THAT RELATES TO OR IS BASED ON ANY COMBINATION OF PRODUCTS EVEN IF DESCRIBED IN TI RESOURCES OR OTHERWISE. IN NO EVENT SHALL TI BE LIABLE FOR ANY ACTUAL, DIRECT, SPECIAL, COLLATERAL, INDIRECT, PUNITIVE, INCIDENTAL, CONSEQUENTIAL OR EXEMPLARY DAMAGES IN CONNECTION WITH OR ARISING OUT OF TI RESOURCES OR USE THEREOF, AND REGARDLESS OF WHETHER TI HAS BEEN ADVISED OF THE POSSIBILITY OF SUCH DAMAGES.

You agree to fully indemnify TI and its representatives against any damages, costs, losses, and/or liabilities arising out of your non-compliance with the terms and provisions of this Notice.

This Notice applies to TI Resources. Additional terms apply to the use and purchase of certain types of materials, TI products and services. These include; without limitation, TI's standard terms for semiconductor products http://www.ti.com/sc/docs/stdterms.htm), evaluation modules, and samples (http://www.ti.com/sc/docs/sampterms.htm).

Mailing Address: Texas Instruments, Post Office Box 655303, Dallas, Texas 75265
Copyright © 2017, Texas Instruments Incorporated